# 佳尼有限公司 CANAL COMPONENTS INC

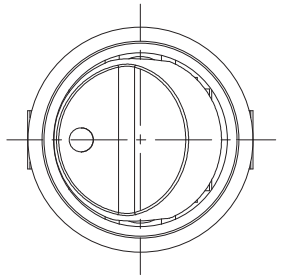

Specification :

Contact resistance: 20mΩ max. (initial)
Insulation resistance: 50MΩ min. (at 500V DC)
Dielectric strength: 1,500V AC 50/60 Hz for 1 minute
Service life: Mechanically: 100,000 operations min.
Electrically: 30,000 operations min.

Rating : 3 A 125 Vac / 1.5 A 250 Vac
Function: ON - OFF ; SPST

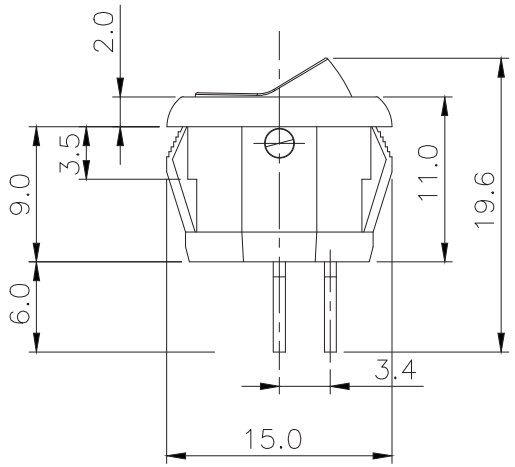


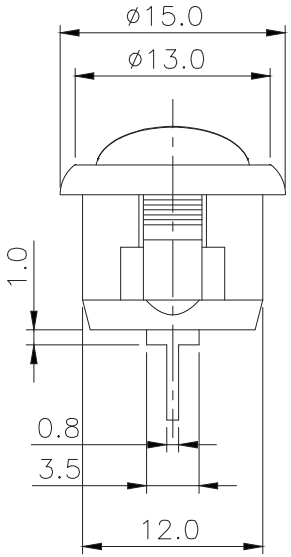


Mounting Hole

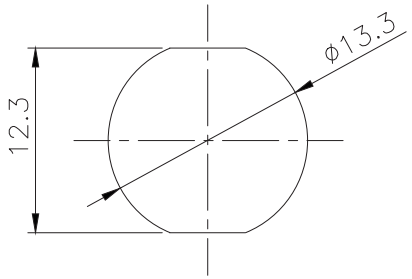


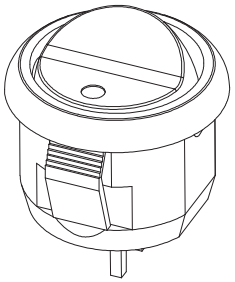

PCB Terminal Type

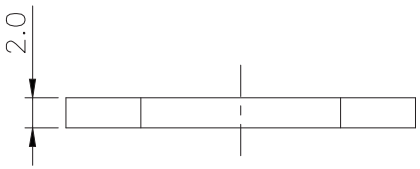


Panel Thickness

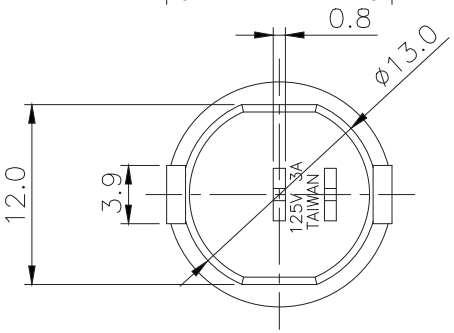


嘉尼企業股份有限公司
工程部
2022.05.10
文件管制章

TOLERANCES UNLESS OTHERWISE SPECIFIED : ± .012 (mm). 0.3

| REVISION | DESCRIPION | REVISED BY | TOLEANCES .X .XX ANGLE ½° | | | | | UNIT | mm | PART NAME | SPEC DRAWING | DWG NO |
|---|---|---|---|---|---|---|---|---|---|---|---|---|
| 4 | | | DRAWN BY | Eric T | DESIGNED BY | 王豐文 | SCALE | | | | | WS5062A |
| 3 | | | | | | | | | | | | |
| 2 | | | CHECKED BY | Jimmy | APPROVED BY | | DATE | 2022.05.10 | | PART NO | SW-2737 | |
| 1 2022.05.10 | 首次出圖 | Eric T | | | | | | | | | | |