嘉尼企業股份有限公司CANAL ELECTRONIC CO.,LTD.

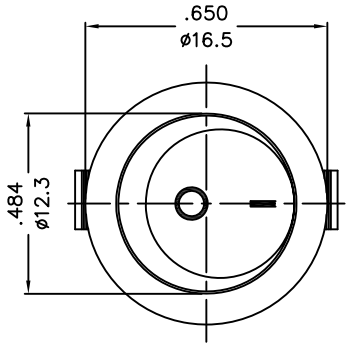

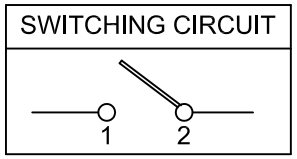

ON-OFF

ROCKER SWITCH MODEL MR5 SERIES

RATING:3A 250VAC μ (cURus)
6A 125VAC μ (cURus) ⚠
3A 250V~ μT100/55 (ENEC15/CQC) ⚠
DIELECTRIC VOLTAGE-WITHSTAND:1,500VAC FOR 1 MINUTE
INSULATION RESISTANCE:DC 500V 100MΩ (MIN.)
CONTACT RESISTANCE:20mΩ INITIAL (MAX.)

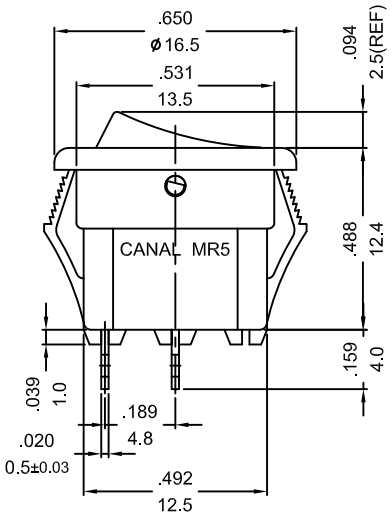

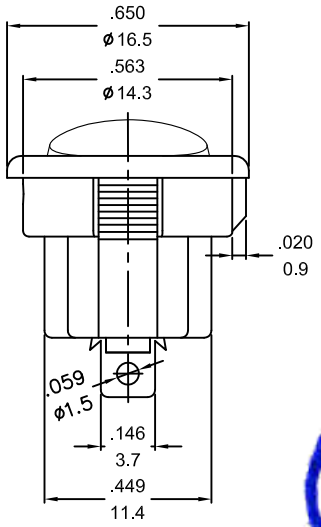

PANEL CUTOUT DIMENSION

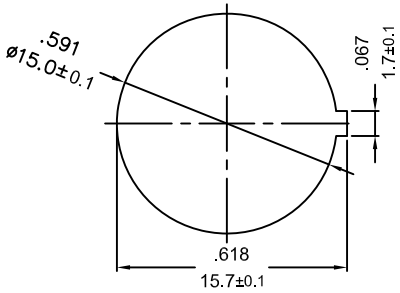

X=(1.0~2.0mm)
PANEL THICKNESS

嘉尼工程
2023.11.09
文件管制章

NOTE: TOLERANCES UNLESS OTHERWISE SPECIFIED:±.012/0.3(in/min)

REVISION	DESCRIPTION	REVISED BY	TOLERANCES				ANGLE ½°	UNIT	mm	PART NAME	MR5 SPEC DRAWING	DWG NO
4			DRAWN BY	张斌	DESIGNED BY	张斌	SCALE	2/1				S8149C
3 2020.08.13	修改Rating叙述	张斌										
2 2020.08.11	修改Rating叙述	张斌	CHECKED BY	San	APPROVED BY	San	DATE	2020.07.22		PART NO	MR5-111R5W-NBBA-0N2C	
1 2020.07.22	首次出图	张斌										