嘉尼企業股份有限公司CANAL ELECTRONIC CO.,LTD.

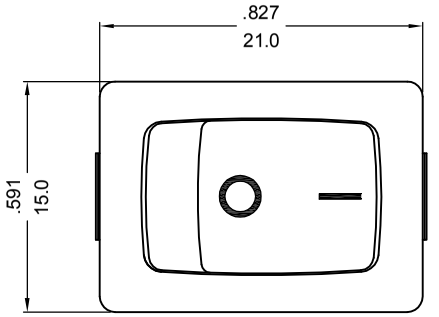

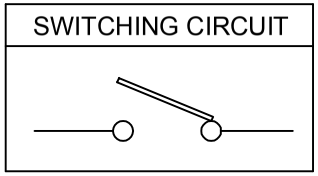

ROCKER SWITCH MODEL MR-2 SERIES
RATING:20A 125VAC, 12A 250VAC (UL/CUL)
16(8)A 250V~T85 (ENEC15/CQC) △2
DIELECTRIC VOLTAGE-WITHSTAND:1,000VAC FOR 1 MINUTE
INSULATION RESISTANCE:DC 500V 100MΩ (MIN.)
CONTACT RESISTANCE:20mΩ INITIAL (MAX.)

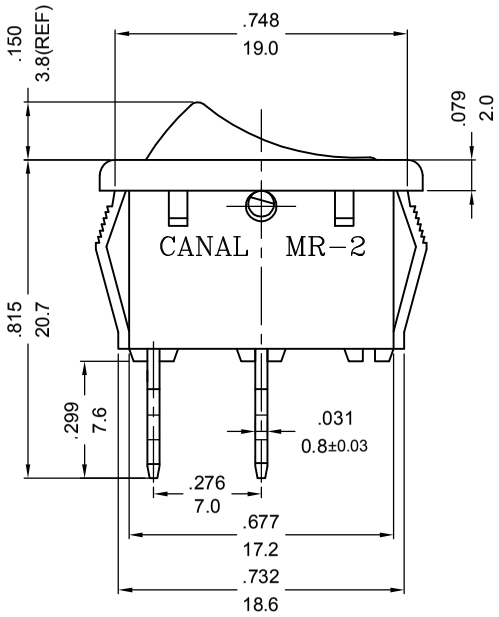

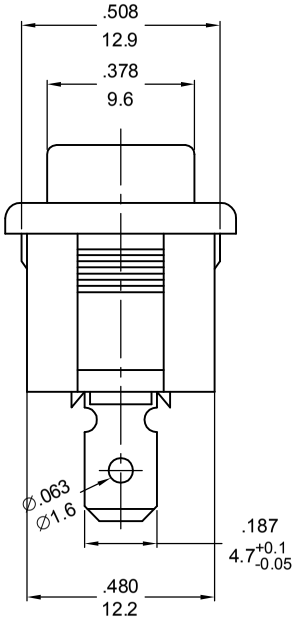

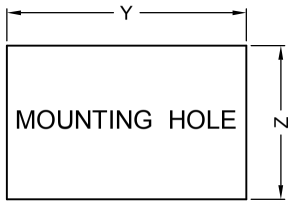

X(PANEL THICKNESS)	Y(CUTOUT DIMENSION)	Z(CUTOUT DIMENSION)
0.75~1.25mm	$19.2^{+0.1}_{-0}$ mm	$12.9^{+0.15}_{-0}$ mm
1.25~2mm	$19.4^{+0.1}_{-0}$ mm	$12.9^{+0.15}_{-0}$ mm
2~3mm	$19.8^{+0.1}_{-0}$ mm	$12.9^{+0.15}_{-0}$ mm

PANEL CUTOUT DIMENSION TABLE

NOTE:TOLERANCES UNLESS OTHERWISE SPECIFIED:±.012/0.3(in/mm)

REVISION	DESCRIPTION	REVISED BY	TOLERANCES				ANGLE ½°	UNIT	mm	PART NAME	MR-2 SPEC DRAWING	DWG NO
△4			DRAWN BY	楊偉韶	DESIGNED BY	蔡劍	SCALE	2/1				S6811B
△3												
△2 2023.06.16	改VDE/ENEC10為ENEC15	杨伟韶	CHECKED BY		APPROVED BY		DATE	2016.11.08		PART NO	MR-2-110-C5-BB-6NWC	
△1 2016.11.08	首次出圖	趙俊鵬										