嘉尼企業股份有限公司CANAL ELECTRONIC CO.,LTD.

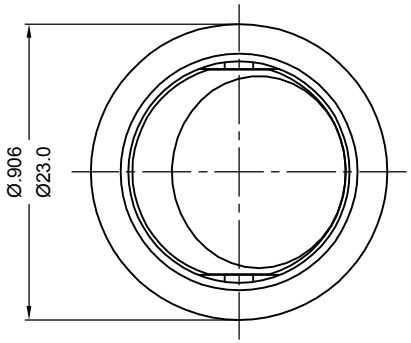

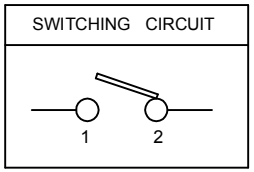

ROCKER SWITCH MODEL MR-2 SERIES

RATING:20A 125VAC, 12A 250VAC (UL/CUL)
16(8)A 250V~T85 (ENEC15/CQC) △2
DIELECTRIC VOLTAGE-WITHSTAND:1,000VAC FOR 1 MINUTE
INSULATION RESISTANCE:DC 500V 100M Ω (MIN.)
CONTACT RESISTANCE:20mΩINITIAL (MAX.)

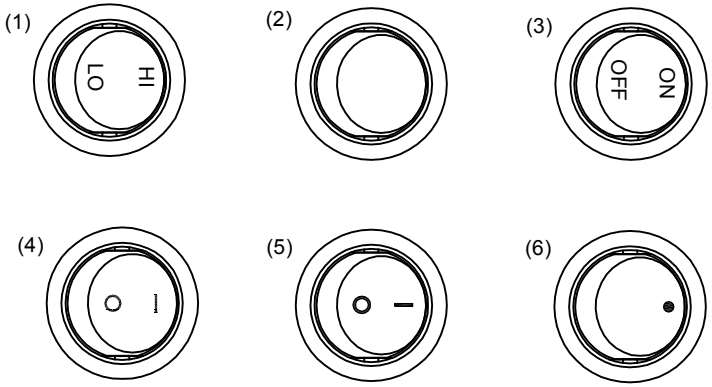

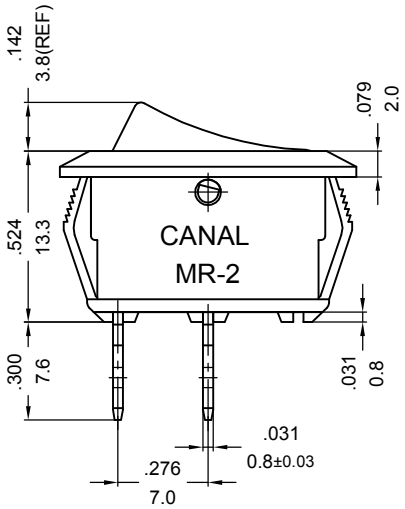

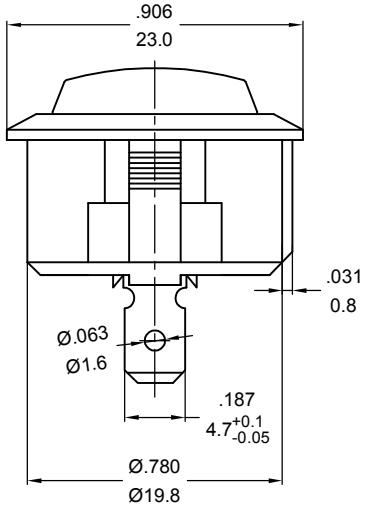

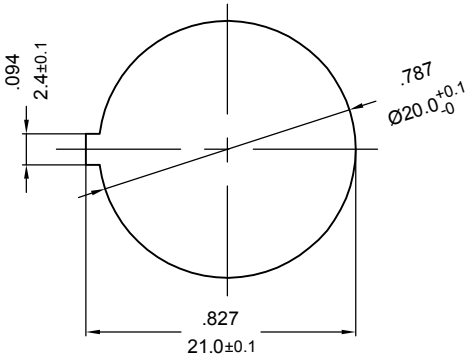

NOTE:TOLERANCES UNLESS OTHERWISE SPECIFIED: ±.012/0.3(in/mm)

PANEL CUTOUT DIMENSION TABLE

嘉尼工程 2023.11.10 文件管制章

REVISION	DESCRIPTION	REVISED BY	TOLERANCES				ANGLE ½°	UNIT	mm	PART NAME	MR-2 SPEC DRAWING	DWG NO
△4			DRAWN BY	楊偉韶	DESIGNED BY	蔡 劍	SCALE	5/3				S6936B
△3												
△2 2023.11.10	改VDE/ENEC10為ENEC15	楊偉韶	CHECKED BY		APPROVED BY		DATE	2017.02.03		PART NO	MR-2-110-R*-**-6N*C	
△1 2017.02.03	首次出圖	楊偉韶										