佳尼有限公司 CANAL COMPONENTS INC

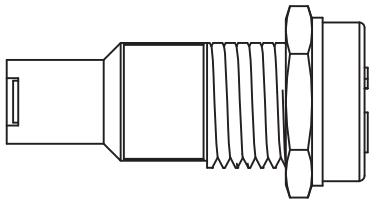

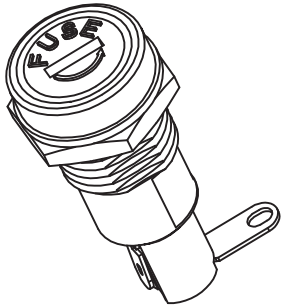

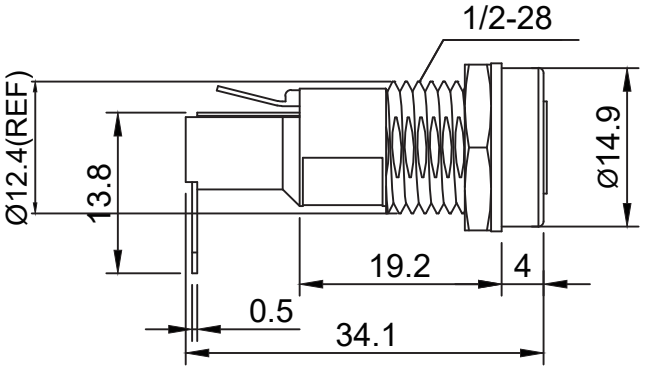

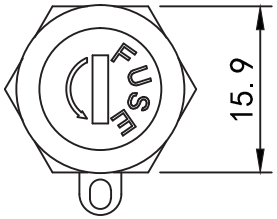

Fuse holder for overload protection

Screw-in mounting

Rating: 10A 250VAC (UL,CUL)

6.3A 250VAC (CQC)

Fuse:Ø5.0x20mm 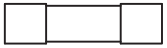

Cap:Bayonet type

Panel thickness:4.5mm max 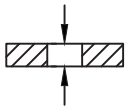

Operating Temperature:-10℃~+70℃

CE c UL us E240653

PANEL MOUNTING

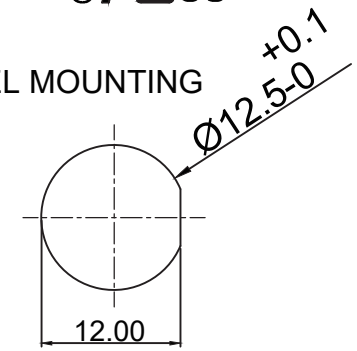

MATERIAL:

Housing:PBT,UL rated 94V2 min
Bayonet:PBT,UL rated 94V2 min
Terminal:Brass,silver or tin plated
Nut:Brass,Ni plated

佳尼企業股份有限公司 工程部 2020.09.24 文件管制章

NOTE: TOLERANCES UNLESS OTHERWISE SPECIFIED : ± .012 (mm). 0.3

REVISION	DESCRIPION	REVISED BY	TOLEANCES .X .XX ANGLE ½°					UNIT mm	PART NAME	SPEC DRAWING	DWG NO
4			DRAWN BY	Eric T	DESIGNED BY	王豐文	SCALE				WS0822D
3											
2			CHECKED BY	Jimmy	APPROVED BY		DATE	2020.09.24	PART NO	FH1-B-MW	
1 2020.09.24	首次出圖	Eric T									