佳尼有限公司 CANAL COMPONENTS INC

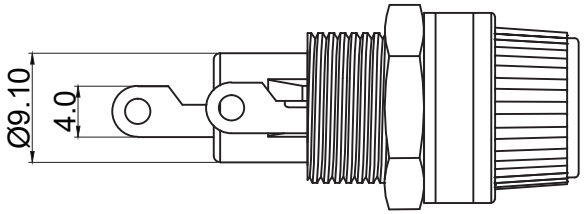

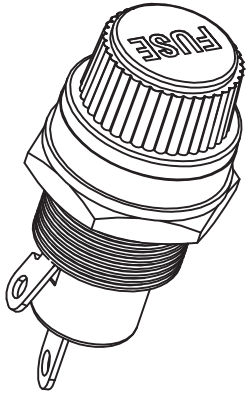

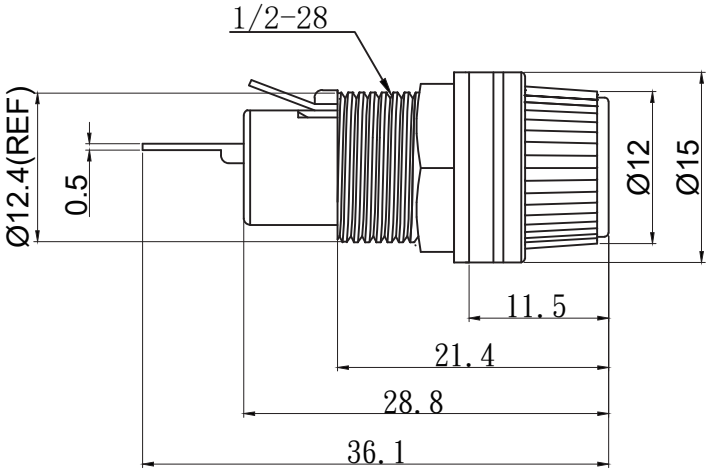

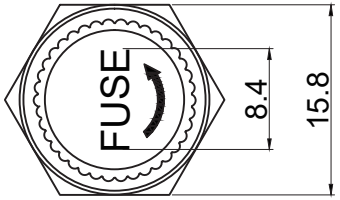

Fuse holder for overload protection

Screw-in mounting

Rating: 10A 250VAC (UL,CUL CE)

Fuse:Ø5.0x20mm

Cap:Screw type

Panel thickness:4.5mm max

Operating Temperature:-10℃~+70℃

PANEL MOUNTING

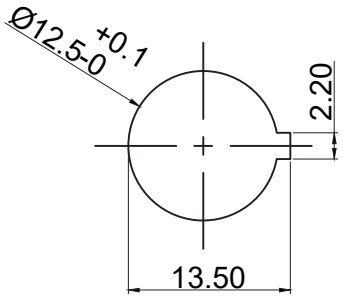

MATERIAL:

Housing:PBT,UL rated 94V 2

Bayonet:PBT,UL rated 94V2

Terminal:Brass,silver or tin plated

Nut:Brass,Ni plated

佳尼企業股份有限公司 工程部 2022.05.12 文件管制章

TOLERANCES UNLESS OTHERWISE SPECIFIED : ± .012 0.3 (mm).

REVISION	DESCRIPION	REVISED BY	TOLEANCES .X .XX ANGLE ½°					UNIT mm	PART NAME	SPEC DRAWING	DWG NO
4			DRAWN BY	Eric T	DESIGNED BY	王豐文	SCALE				WS0675C
3 2022.05.12	圖面修正	Eric T									
2 2014.04.23	圖面修正	Jimmy	CHECKED BY	Jimmy	APPROVED BY		DATE	2007.07.30	PART NO	FH1-12-M	
1 2007.07.30	首次出圖	Jimmy									