Nastawnik BCD RS35007 do druku nr kat. 14749

ELECTRICAL	
Contact rating	
switching no-switching	25mA,24VDC 100mA,50VDC
Contact resistance	100m Max.
Lnsuation resistance	1000M Min.at 100VDC
Dielectric strength	250VAC for 60seconds

DIMENSIONS

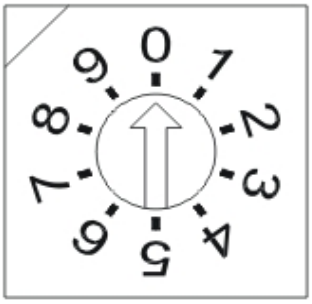

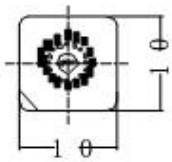

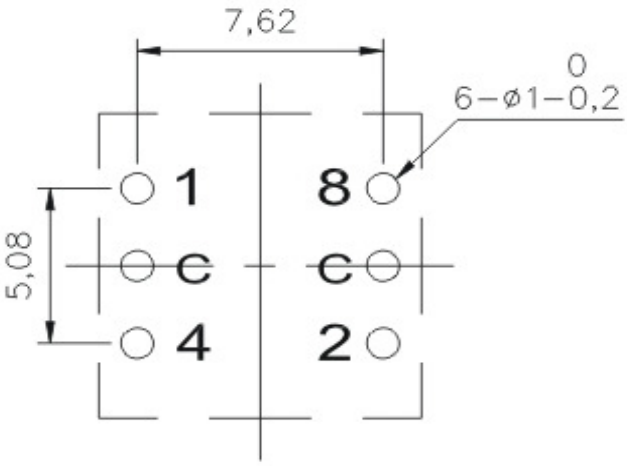

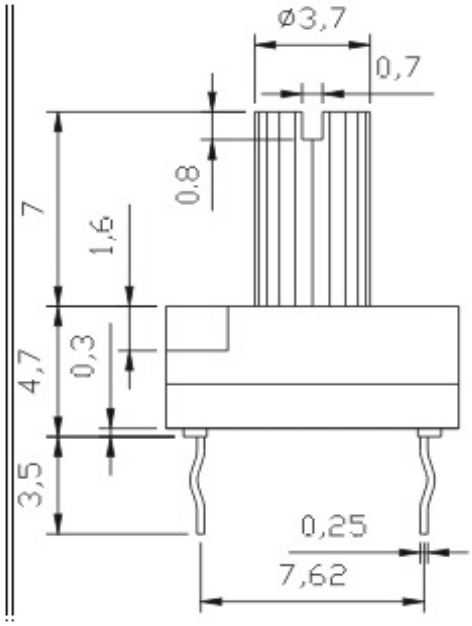

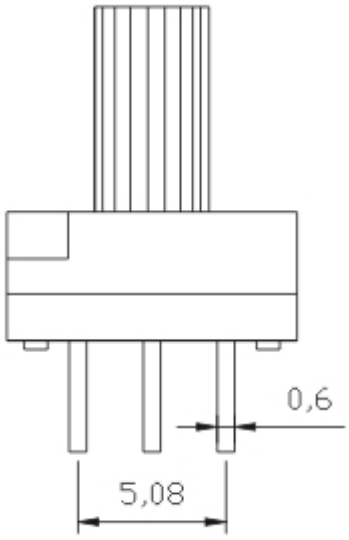

OUTPUT CODES

PIN NO	POSITION									
	0	1	2	3	4	5	6	7	8	9
1		●		●		●		●		●
2			●	●			●	●		
4					●	●	●	●		
8									●	●