嘉尼企業股份有限公司CANAL ELECTRONIC CO.,LTD.

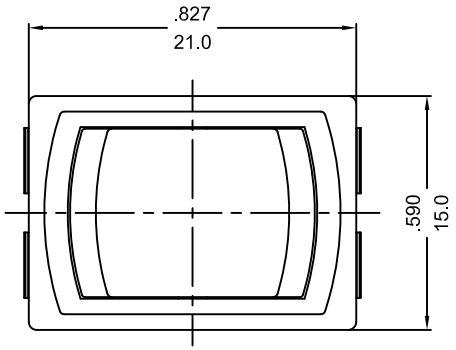

SWITCHING CIRCUIT

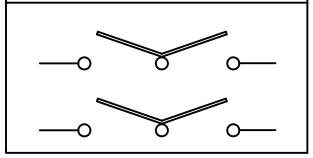

ROCKER SWITCH MODEL: MR-3

RATING: 10A 125/250VAC (cURus)
10(4)A 250V~ T85 (FI/ENEC)
DIELECTRIC STRENGTH:1000VAC FOR 1 MINUTE
INSULATION RESISTANCE:500VDC 100MΩ (MIN)
CONTACT RESISTANCE:20mΩ INITIAL (MAX)

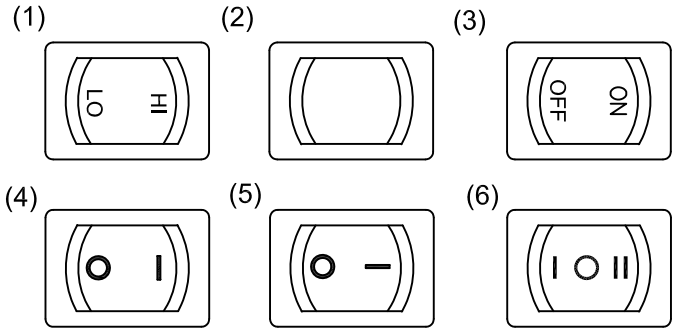

SCALE:1/1

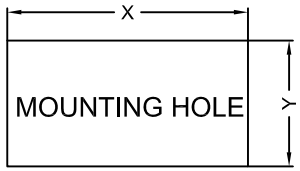

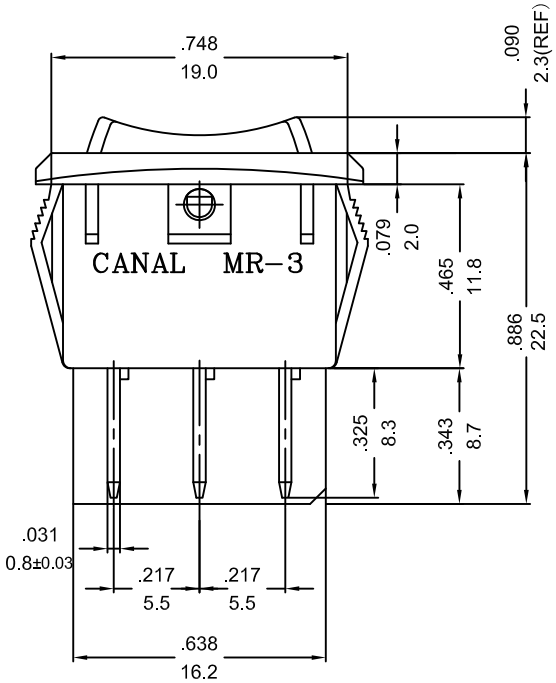

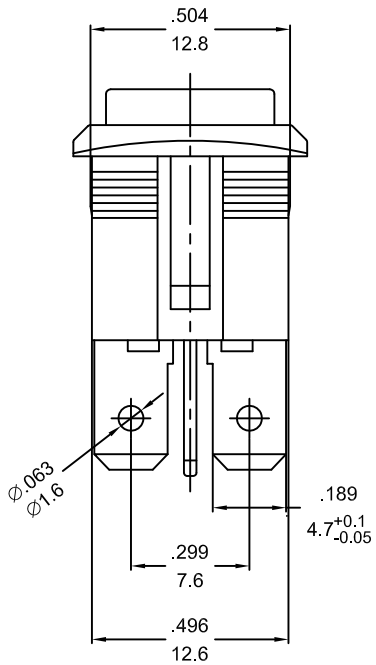

X(CUTOUT DIMENSION)	Y(CUTOUT DIMENSION)	Z(PANEL THICKNESS)
19.2 $^{+0}_{-0.1}$ mm	12.9 $^{+0.15}_{-0}$ mm	0.75~1.25mm
19.4 $^{+0}_{-0.1}$ mm	12.9 $^{+0.15}_{-0}$ mm	1.25~2mm
19.8 $^{+0}_{-0.1}$ mm	12.9 $^{+0.15}_{-0}$ mm	2~3mm

PANEL CUTOUT DIMENSION TABLE

NOTE:TOLERANCES UNLESS OTHERWISE SPECIFIED:± .012/0.3 (in/mm)

REVISION	DESCRIPTION	REVISED BY	TOLERANCES			ANGLE $\frac{1}{2}$°		UNIT mm	PART NAME	MR-3 SPEC DRAWING	DWG NO
4			DRAWN BY	達志各	DESIGNED BY	蔡劍	SCALE	1/2			S3208B
3											
2 2012.09.06	取消CSA安規后，重新整理圖面	郭 洋	CHECKED BY	2012.10.22 11:27:54 +08'00'	APPROVED BY	2012.10.22 11:28:07 +08'00'	DATE	2009.11.10	PART NO	MR3-230-C*-**N*C	
1 2009.11.10	首次出圖	達志各									