Quick Details

Place of Origin:Zhejiang, China (Mainland)

Usage:Position Sensor

Application:Industrial Automation

Theory:Capacitance Sensor

Output:Switching Transducer

Material:ABS Resin

Compact volume
Wide voltage range
Diversified exterior structures
high precision of repeated location
Good performance of anti-interference.
Dust proof,vibration proof,waterproof and Oil-proof.

DETECTION DISTANCE			0-10MM	
Non-Flush	DC10-30V	NPN	NO	E2K-F10MC1
			NC	E2K-F10MC2
			NO+NC	E2K-F10MC3
		PNP	NO	E2K-F10MF1
			NC	E2K-F10MF2
			NO+NC	E2K-F10MF3
	AC90-250V	SCR Controllable silicon	NO	E2K-F10MA0
			NC	E2K-F10MAC
Control output		DC		200mA
		SCR/ Relay		300mA
Output voltage drop DC/AC				DC<3V AC<10V
Consumption current				DC<15mA AC<10mA
Detected object				Conductor and Diractric Body
Repeated precision				0.05
DC/AC Response frequency				50Hz/10Hz
Working environment temperature				-25℃~75℃
Insulation resistance				50MΩ
Shell material				ABS Plastic
Protection grade				IEC standard IP54
Alternative model at home and abroad				

Dimension

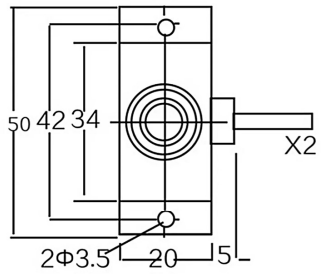

Technical Data

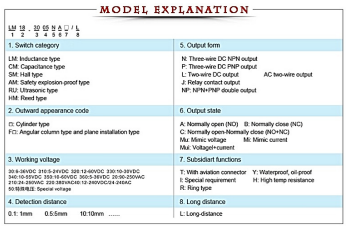

MODEL EXPLANATION

LM 18 - 10 65 N A □ / L
1 2 3 4 5 6 7 8

1. Switch category	5. Output form
LM: Inductance type CM: Capacitance type SM: Hall type AM: Safety explosion-proof type RU: Ultrasonic type HM: Reed type	N: Three-wire DC NPN output P: Three-wire DC PNP output L: Two-wire DC output AC two-wire output J: Relay contact output NP: NPN+PNP double output
2. Outward appearance code	**6. Output state**
□: Cylinder type FC□: Angular column type and plane installation type	A: Normally open (NO) B: Normally close (NC) C: Normally open-Normally close (NO+NC) Mu: Mimic voltage Mi: Mimic current Mul: Voltage+current
3. Working voltage	**7. Subsidiart functions**
30:6-36VDC 310:5-24VDC 328:12-60VDC 330:10-30VDC 340:10-55VDC 350:18-40VDC 360:5-36VDC 20:90-250VAC 210:24-280VAC 220:380VAC/DC 12:240VDC/24-240AC 50:特殊电压 Special voltage	T: With aviation connector Y: Waterproof, oil-proof L: Special requirement H: High temp resistance R: Ring type
4. Detection distance	**8. Long distance**
0.1: 1mm 0.5:5mm 10:10mm ……	L: Long-distance

Application

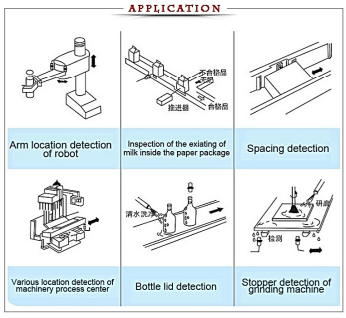

Product Display

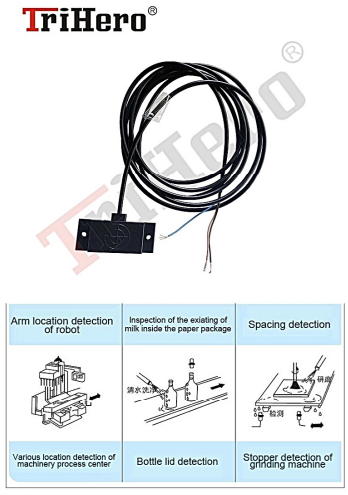

Product Display