嘉尼企業股份有限公司 CANAL ELECTRONIC CO.,LTD.

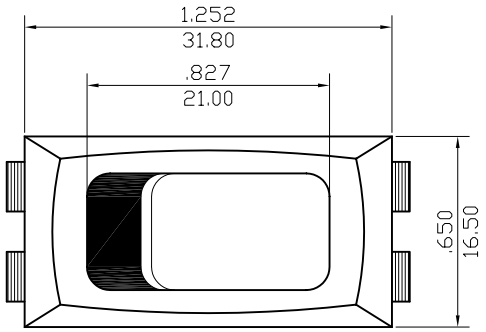

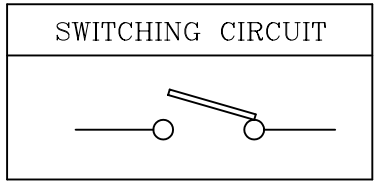

嘉尼企業股份有限公司
研發部
2004.02.26
發圖章

SPECIFICATION MODEL :"HB" SERIES

RATING:20A 125VAC, (UL,CSA)
16A 250VAC, (UL,CSA)
3/4HP 250VAC, (UL,CSA)
16(4)A 250V~T125 (VDE,SEMKO, DEMKO,NEMKO,FIMKO,SEV,CQC)

CONTACT RESISTANCE:20mΩ(MAX),

INSULATION RESISTANCE:
500VDC – 100MΩ(MIN).

WITHSTAND VOLTAGE:1,000VAC 1 MINUTE.

OPERATION: 500±200 GRAM.

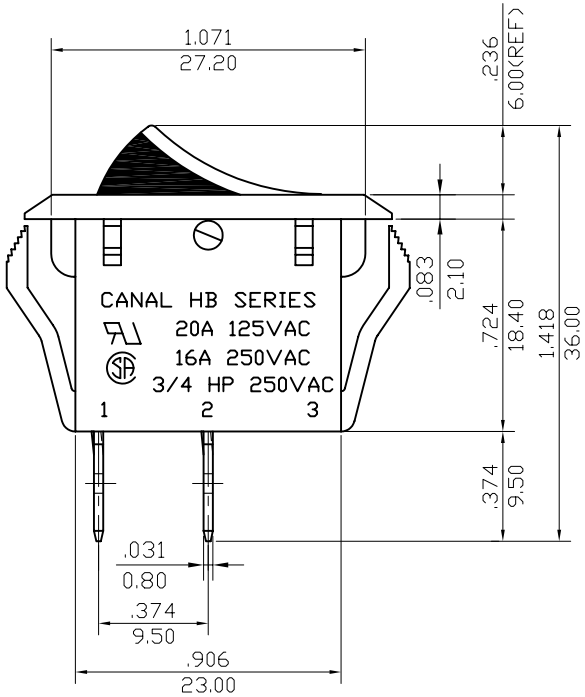

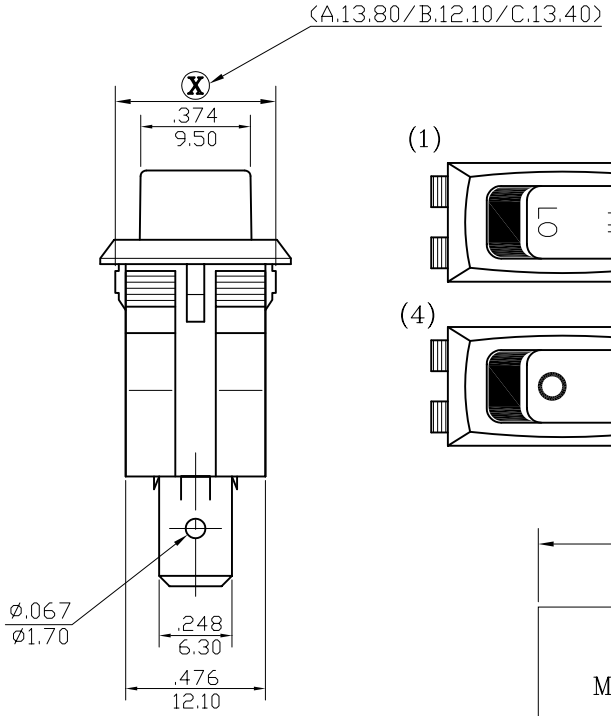

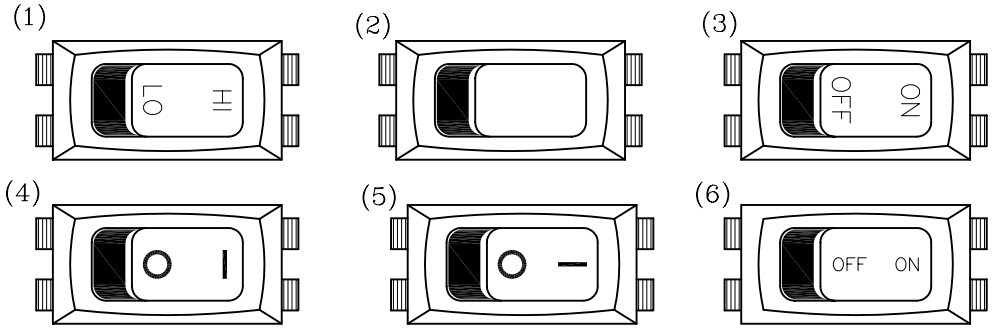

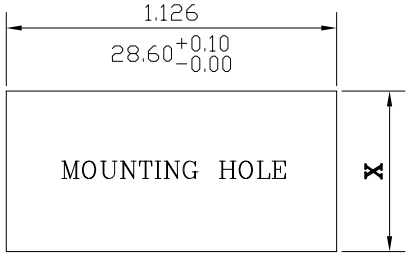

X=CUTOUT DIMENSION		
A	.547/13.90	+0.10 −0.00
B	.480/12.20	+0.10 −0.00
C	.531/13.50	+0.10 −0.00

NOTE: TOLERANCES UNLESS OTHERWISE SPECIFIED:± $\frac{0.012}{0.3}$ (in/mm)

REVISION	DESCRIPION	REVISED BY	TOLEANCES .X .XX ANGLE ½°					UNIT mm	PART NAME	HB SPEC DRAWING	DWG NO
4			DRAWN BY	楊紹才	DESIGNED BY	楊紹才	SCALE	2:1			S0057A
3											
2			CHECKED BY	?	APPROVED BY	?	DATE	2003.12.25	PART NO	HB110-C*N-**R-(A/B/C)	
1 2003.12.25	修正圖框，重新出圖	楊紹才									