嘉尼企業股份有限公司 CANAL ELECTRONIC CO.,LTD.

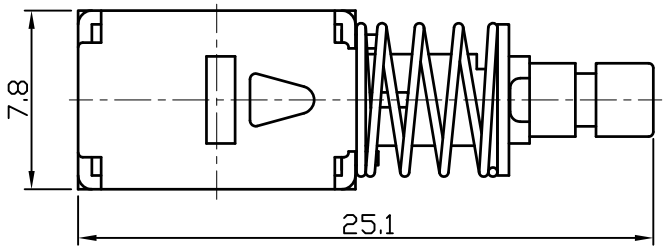

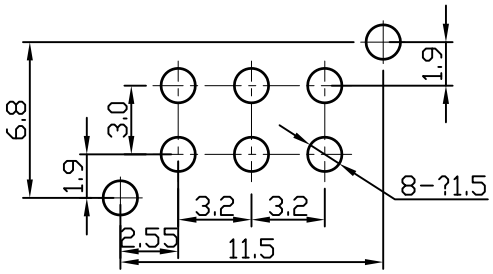

P.C.B LAYOUT

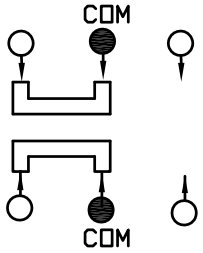

SCHEMATIC

嘉尼企業股份有限公司
研發部
2009.05.19
發圖章

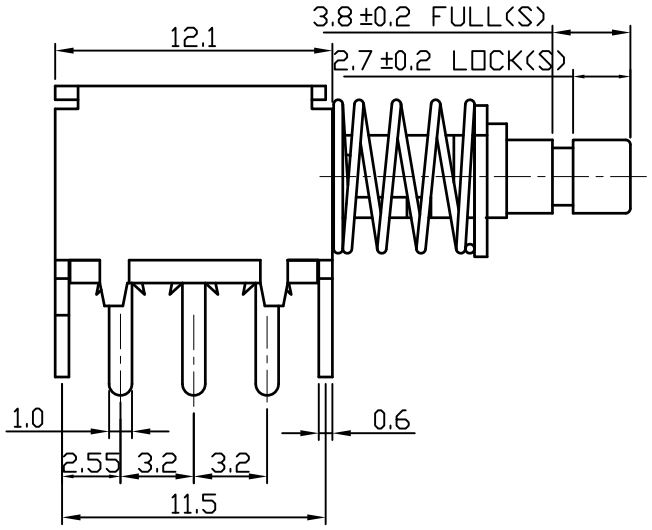

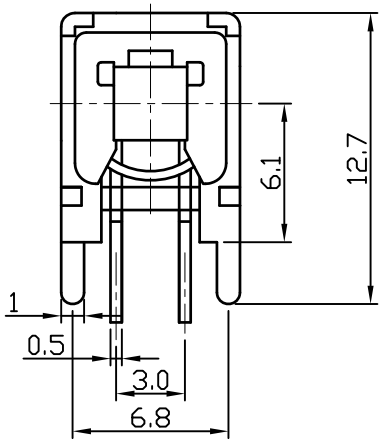

Rated Voltage	DC30V
Rated Current	2A
Contact Resistance	≤50mΩ
Operating Force	300±100gf
Mechanical Life	10,000 CYCLES
Electrical Life	10,000 CYCLES
Insulation Resistance	≥100MΩ DC250V
Withstand Voltage	AC250V 1 minute
Position Travel	2.7±0.2mm LOCK(S)
	3.8±0.2mm FULL(S)
Soldering Process	Hand soldering
Operating Temper	-10℃ ～ +60℃
Shipping Temper	<85%RH

REVISION	DESCRIPION	REVISED BY	TOLEANCES .X ±0.2 ANGLE ½°					UNIT mm	PART NAME	PS908L SPEC DRAWING	DWG NO
4			DRAWN BY	吳美玉	DESIGNED BY	ERIC	SCALE	1/3			WS1035A
3											
2			CHECKED BY		APPROVED BY		DATE	2009.05.19	PART NO	PS908L-22 (2A)	
1 2009.05.19	換新圖框,重新出圖	吳美玉									