CHARACTERISTICS	
Contact resistance	30mΩmax. (initial)
Insulation resistance	100MΩ min. (at 500 VDC)
Dielectric strength	1,000 VAC,50/60Hz for 1 minute between
Mechanically service life	10,000,000 operations min.
Electrically service life	200,000 operations min.

Rating	5A 125VAC,3A 250VAC
Terminal	
Item No.	
OF max.	25g
RF min.	7g
PT max.	7.5mm
OT min.	2.3mm
MD max.	1.6mm
FP max.	17.0mm
OP	9.0 ± 1.3mm

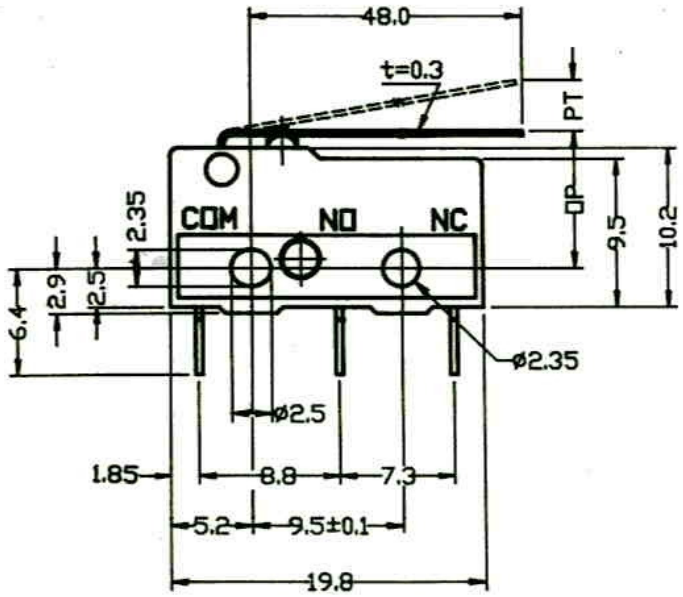

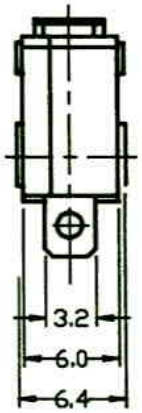

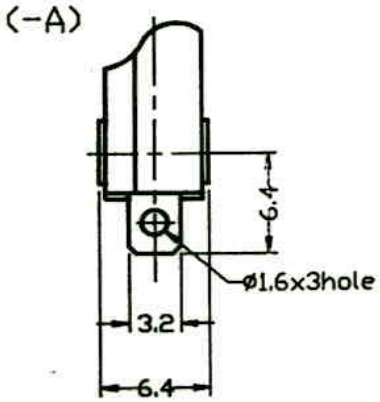

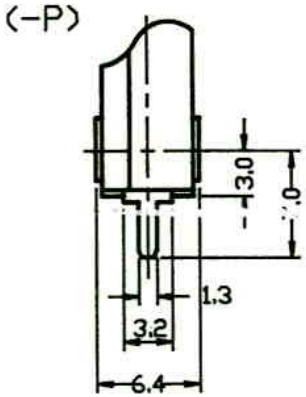

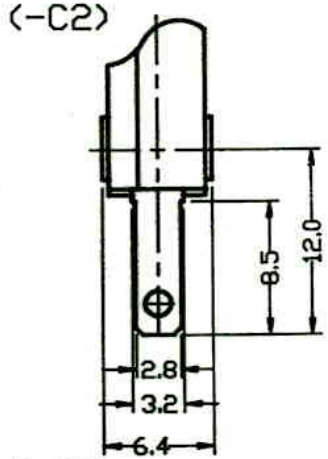

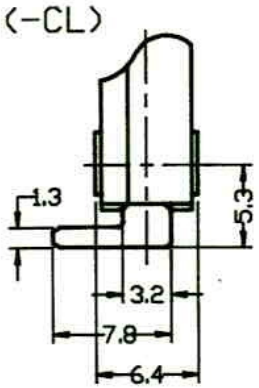

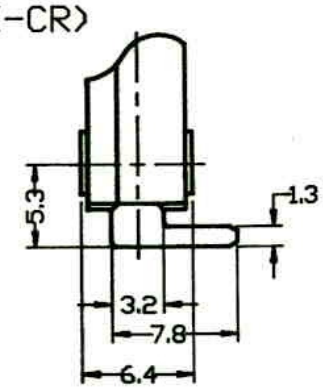

海立電氣有限公司 HIGHLY ELECTRIC CO LTD	修正REVISION	日期DATE	說明DESCRIPTION	審核CHECKED	單位UNIT m/m	材質MATERIAL	日期DATE 84.04.17	料號 TYPE NO	SS0508
				繪圖DRAWN PETER	比例SCALE 2=1	公差TOLERANLE ±0.15	加工PROCESS	檔名 FILE NO	SS0508