嘉尼企業股份有限公司 CANAL ELECTRONIC CO.,LTD.

G905-200F03W1

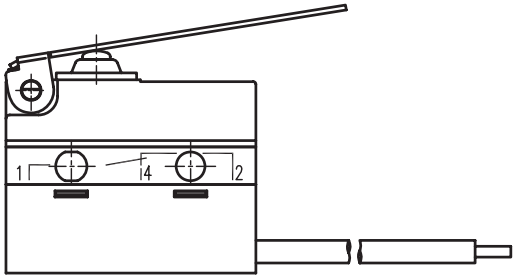

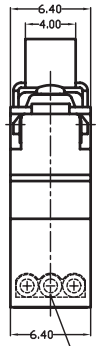

COM:UL1007 20AWG BLACK(黑色)
NO:UL1007 20AWG BLUE(蓝色)
NC:UL1007 20AWG GRAY(灰色)

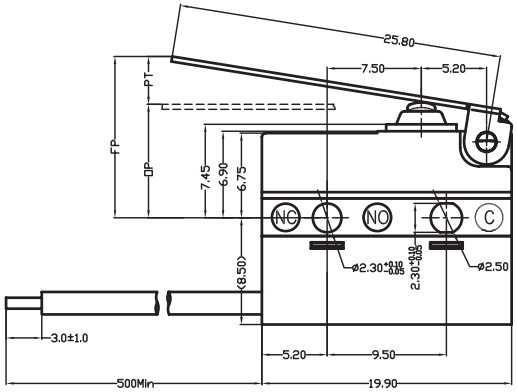

Circuit Diagram

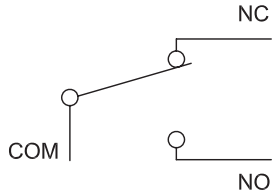

Mounting holes

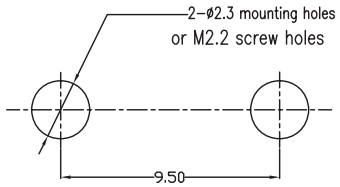

CHARACTERISITICS	
Operating Force:	55gf MAX.
Release Force:	8gf MIN.
Operation Position:	8.8± 1.8MM.
Pre Travel:	6.3MM MAX.
Differential Travel:	1.0MM MAX.
Over Travel:	1.0MM MIN.
Total Travel:	

ELECTRICAL DATA	
CONTACT ARRANGEMENT	PROTECTION
S.P.D.T	IP67
Rating	
G905 5A 125/250VAC 6A 125/250VAC μ 25T120	

NOTES:
MOUNTING HOLES WILL ACCEPT Ø2.2 MAX PINS OR SCREWS.

REVISION	DESCRIPION	REVISED BY	TOLEANCES .X .XX ANGLE ½°					UNIT mm	PART NAME	SPEC DRAWING	DWG NO
4			DRAWN BY	張俊雄	DESIGNED BY	王豐文	SCALE				WS2502A
3											
2			CHECKED BY	Jimmy	APPROVED BY		DATE	2014.07.10	PART NO	G905-200F03W1	
1 2014.07.10	首次出圖	張俊雄									