used for: D-SUB

POS.	A -0.76	B -0.25	C	Art.-NO.
9	31.19	16.46	$25.00^{+0.12}_{-0.13}$	**302A10019X**
15	39.52	24.79	$33.30^{+0.15}_{-0.1}$	**302A10029X**
25	53.42	38.50	47.04 ±0.13	**302A10059X**
37	69.70	54.96	63.50 ±0.13	**302A10069X**

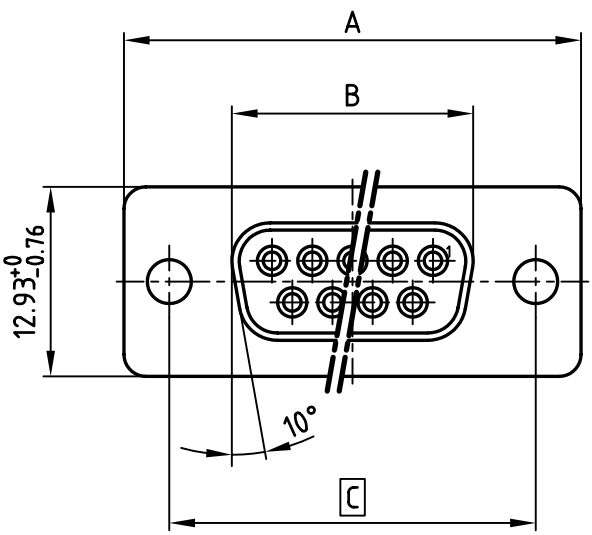

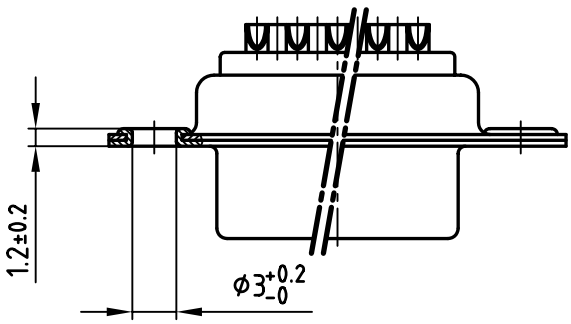

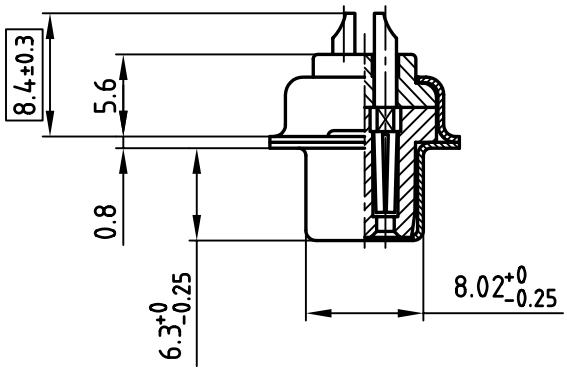

NOTES:

1. METALSHELLS: STEEL; min. 320µ" TIN
2. INSULATORS: PBT GF UL 94 V-0, BLACK
3. CONTACTS: COPPER ALLOY
4. PLATING: min. 8µ" HARD GOLD OVER min. 50µ" NICKEL
5. ACCEPTS CABLE AWG 20
6. ☐ = CRITICAL DIMENSION: SPC

Directive 2002/95/EC „RoHS" Compliant

THIS DRAWING MAY NOT BE COPIED OR REPRODUCED IN ANY WAY, AND MAY NOT BE PASSED ON TO A THIRD PARTY WITHOUT WRITTEN PERMISSION. OWNERSHIP AND COPYRIGHT OF CONEC GmbH

DO NOT ALTER CAD DRAWING BY HAND

rev.	description	date	name

tolerance

2001	date	name
drawn	28.05.	Parei
appd.	28.05.	E. Mickenbecker
norm	DIN 41652	
d-old		

CONEC®

scale: 2:1

material: SEE NOTES

title:

D-SUB FEMALE

9-37pos. SOLDER CUP
STAMPED CONTACTS

dwg no: 16K1A206A

AutoCAD 2000

DIN-A 4

sh:1/2

part no: SEE TABLE