Extrusion

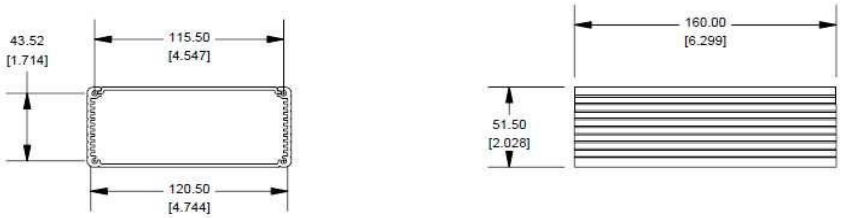

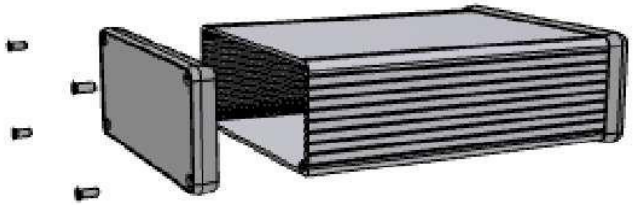

EXTRUSION DESIGNED FOR 120MM WIDE PC BOARD

Slot Details

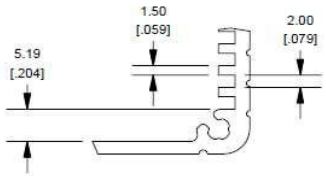

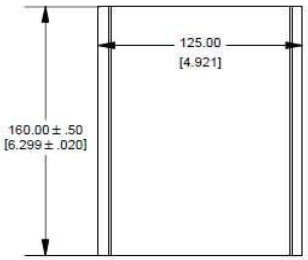

Closed Bezel

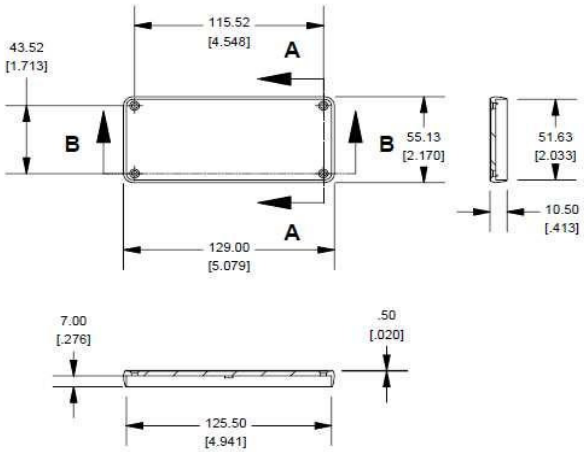

Enclosures can be Factory Modified (Milling, Drilling, Printing etc.)
Solid models of this enclosure available in STEP or IGES.
Contact Factory mjm@hammondmfg.com*

NOTE
Purchased assembly includes box, plastic bezels, #6 Taptight screws and self adhesive rubber feet.
Box made from Extruded Aluminum 6063.
Bezels made with ABS.

1455Q1602	
PART NUMBERS	
Clear Anodized	1455Q1602
Black Anodized	1455Q1602BK
ACCESSORIES	
See website for accessories.	

HAMMOND MANUFACTURING™

1455Q1602

www.hammondmfg.com