EXTRUSION

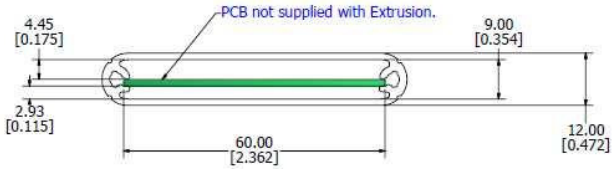

Extrusion designed for 60mm wide x 100mm long PC Boards

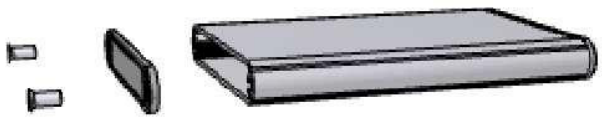

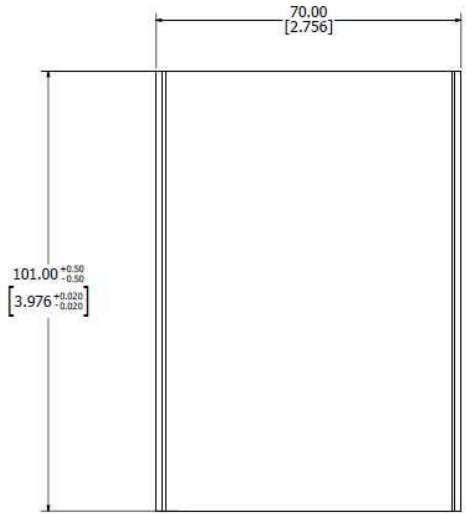

BEZEL

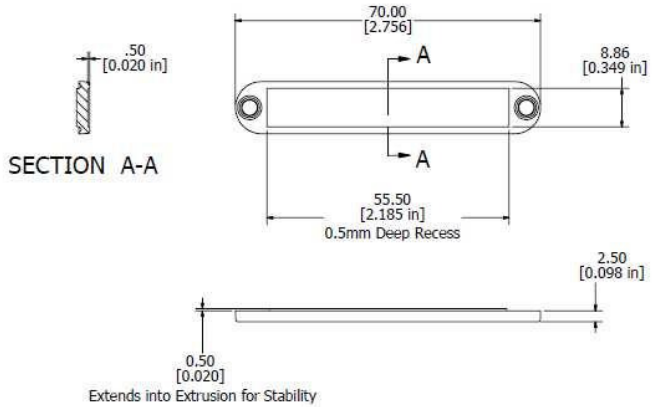

Enclosures can be Factory Modified (Milling, Drilling, Printing etc.)
Solid models of this enclosure available in STEP or IGES.
Contact Factory mjm@hammondmfg.com

NOTE
Purchased assembly includes box, plastic bezels, #6 Taptight screws and self adhesive rubber feet.
Box made from Extruded Aluminum 6063.
Bezels made from polycarbonate.

1455A1002	
PART NUMBERS	
Clear Anodized	1455A1002
Black Anodized	1455A1002BK
ACCESSORIES	
See website for accessories.	

HAMMOND MANUFACTURING™

1455A1002

www.hammondmfg.com